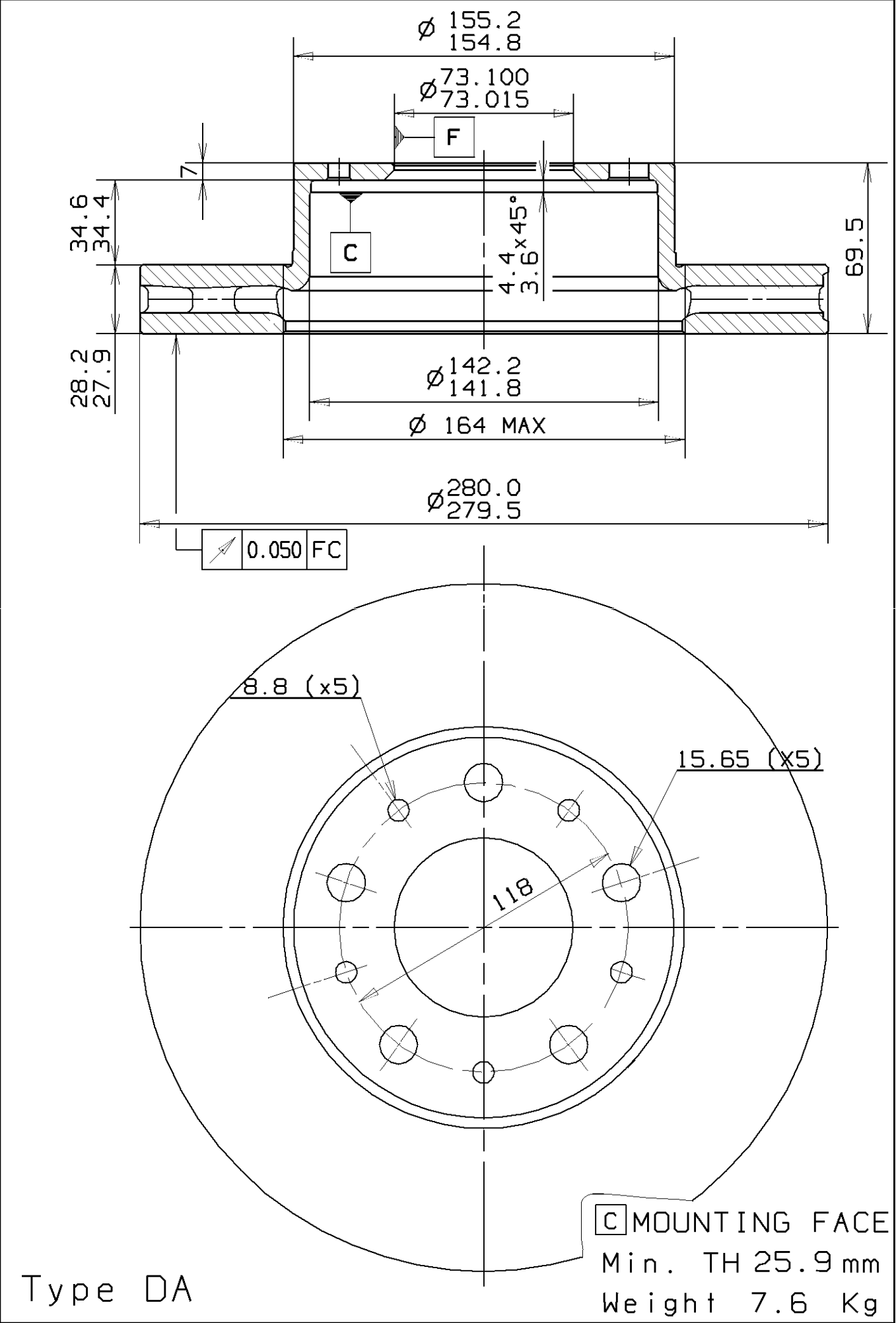
Ø 155.2
154.8
Ø 73.100
73.015
F
7
34.6
34.4
C
4.4
3.6 x 45°
69.5
28.2
27.9
Ø 142.2
141.8
Ø 164 MAX
Ø 280.0
279.5
0.050 FC
8.8 (x5)
15.65 (X5)
118
C MOUNTING FACE
Min. TH 25.9 mm
Weight 7.6 Kg
Type DA